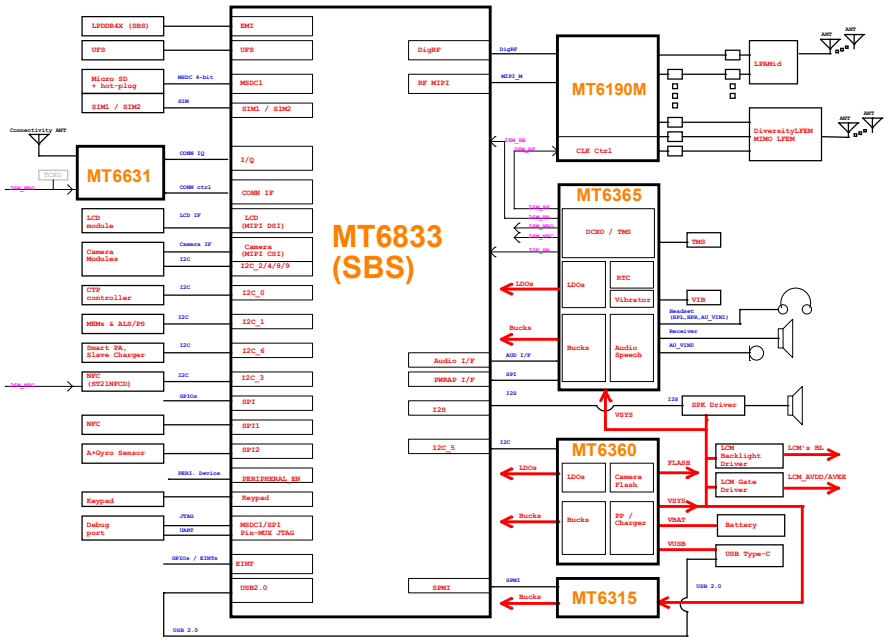

华勤通讯 Huaqin Telecom Technology Com.,Ltd		
Title	Block Diagram	
Size D	Project <Doc>	Rev V1
Date: Monday, October 18, 2021	Sheet 1 of 50	

Date	Version	Page	Change notice
2020.06.xx	Pre-Released		
2020.07.xx	V01		
2020.08.14	V02	13_BB_1	Disconnect Dummy pins A1,A34,AP1,AP34 to GND
		29_POWER_EXT	Change C2923 cap from 6.3V to 10V
		20_POWER_MT6365_Buck	[PDN] Change Caps of DVDD_GPU - C2039/C2038 to NC
		25_POWER_MT6315_VMD	[PDN] Change Caps of DVDD_MODEM - C2502/C2534/C2523/C2522 to NC
2020.08.26	V03	File name	Modify the file name

华勤通讯 Huaqin Telecom Technology Com.,Ltd		
Title SM6350_Control		
Size D	Project <Doc>	Rev V1
Date: Monday, October 18, 2021	Sheet 2 of 50	

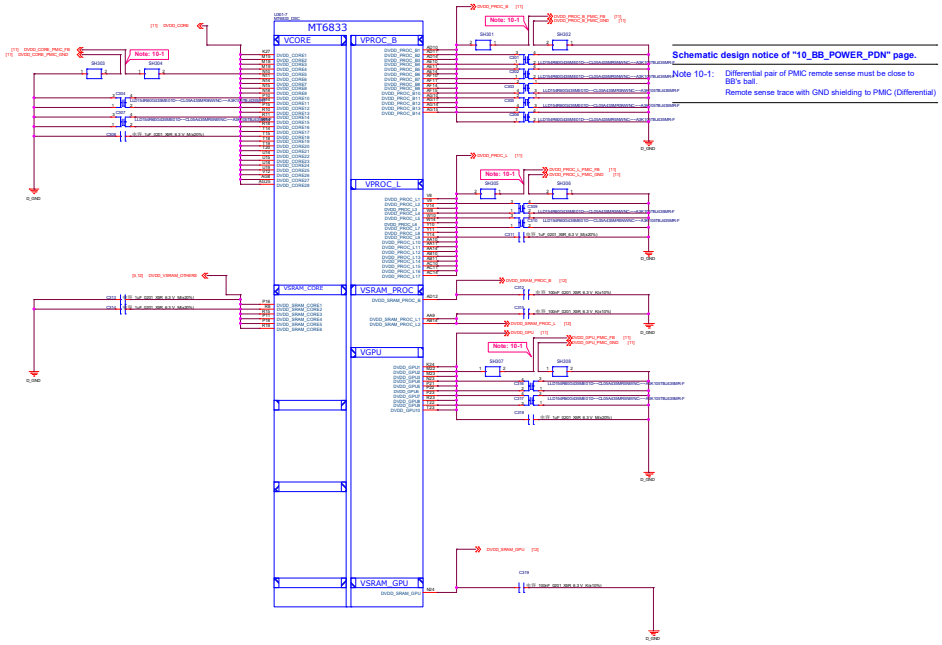

华勤通讯 Huaqin Telecom Technology Com.,Ltd		
Title	03.BB_POWER_PDN1	
Size D	Project <Doc>	Rev V1
Date: Monday, October 18, 2021	Sheet 3 of 23	

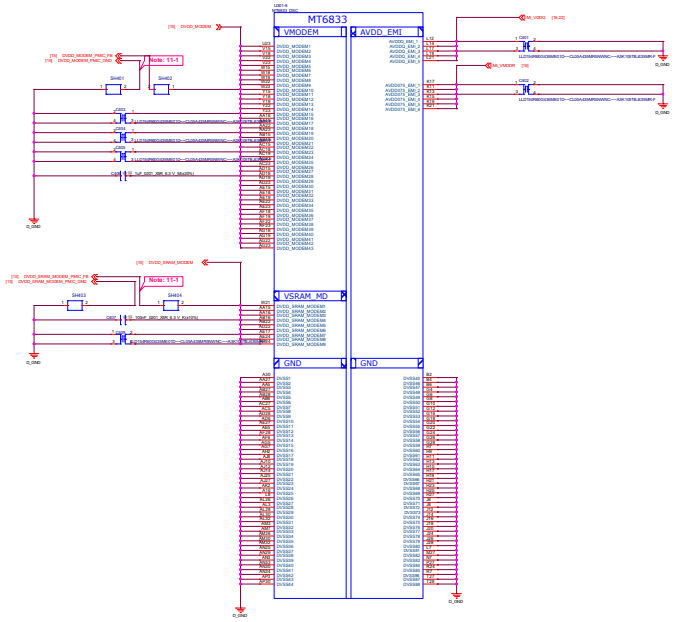

Schematic design notice of "11_BB_POWER_PDN" page.

Note 11-1: Differential pair of PMIC remote sense must be close to BB's ball.
Remote sense trace with GND shielding to PMIC (Differential)

华勤通讯 Huaqin Telecom Technology Com.,Ltd		
Title 04.BB_POWER_PDN2		
Size D	Project <Doc>	Rev V1
Date: Monday, October 18, 2021	Sheet 4 of 23	

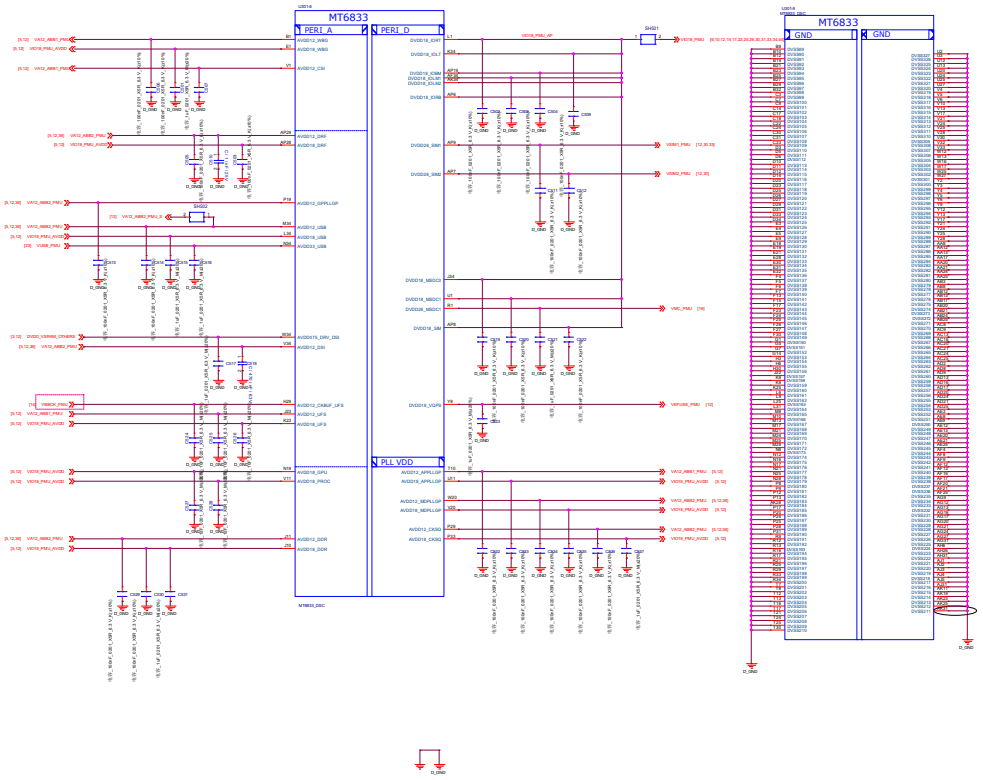

华勤通讯 Huaqin Telecom Technology Com.,Ltd		
Title 05.BB_POWER_IO		
Size D	Project <Doc>	Rev V1
Date: Monday, October 18, 2021	Sheet 5 of 23	

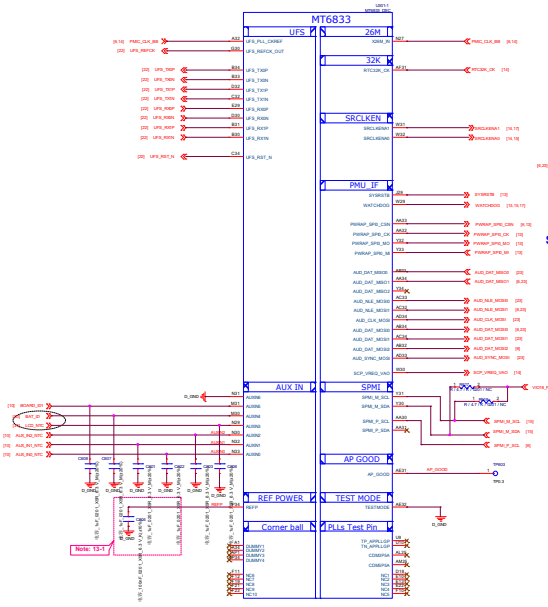

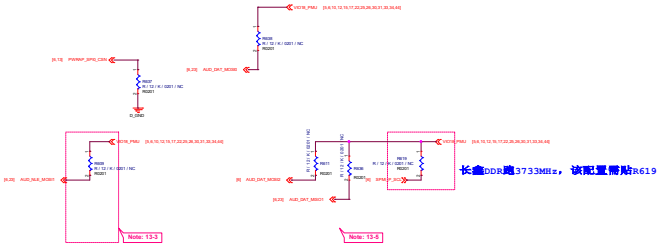

Schematic design notice:

Note 13-1: The load cap. have to be placed as close to REFP ball as possible.

Note 13-2: "PWRAP_SPI0_CSN" and "AUD_DAT_MOSI0"I pin features in trapping pin to enable JTAG.

PWRAP_SPI0_CSN	AUD_DAT_MOSI0	AP JTAG	IO JTAG
H (Default)	L (Default)	N/A	N/A
H	H (by external PU)	SPI0+EINT8	N/A
L (by external PD)	L	SPI0+EINT8	EINT16/EINT17/EINT18/EINT19/EINT20/EINT21/EINT22/I2C7
L (by external PD)	H (by external PU)	MSDC1_CLK, MSDC1_CMD, MSDC1_DAT0, MSDC1_DAT1, MSDC1_DAT2	N/A

Note 13-3: "AUD_NLE_MOSI1" features in trapping pin to enable JTAG over USB 2.0 port.

AUD_NLE_MOSI1	USB JTAG
L (Default)	Disable serial JTAG over USB
H (by external PU)	DP/DM output JTAG

Note 13-4: "AUD_SYNC_MOSI" and "AUD_NLE_MOSI0" pin features in trapping pin to booting (eMMC/UFS/SPI NOR).

AUD_SYNC_MOSI	AUD_NLE_MOSI0	Storage Booting
L (Default)	L (Default)	Only UFS boot
L	H (by external PU)	Only eMMC boot
H (by external PU)	L	Reserved
H (by external PU)	H (by external PU)	Reserved

Note 13-5: "AUD_DAT_MOSI1" and "AUD_DAT_MOSI2" pin features in trapping pin to enable DDR.

AUD_DAT_MOSI1	AUD_DAT_MOSI2	SPMI_P_SCL	DDR
L (Default)	L (Default)	L (Default)	LP4x-MCP-4266Mbps
L	H (by external PU)	L (Default)	LP4x-Discrete-4266Mbps
H (by external PU)	L	L (Default)	Reserved
H (by external PU)	H (by external PU)	L (Default)	Reserved

Note : SPMI_P_SCL for DDR 4266Mbps/3733Mbps Co-load, 'L' = 4266Mbps, 'H(by external PU)' = 3733Mbps

Note 13-6: "AUD_DAT_MISO1" is trapping pin to select VEMC Voltage.

AUD_DAT_MISO1	VEMC Voltage
L (Default)	VEMC=3.0V for VCC of UFS2.* device
H (by external PU)	VEMC=2.5V for VCC of UFS3.0 device

华勤通讯 Huaqin Telecom Technology Com.,Ltd			
Title	06.BB_1		
Size D	Project <Doc>		Rev V1
Date: Monday, October 18, 2021	Sheet 6 of 23		

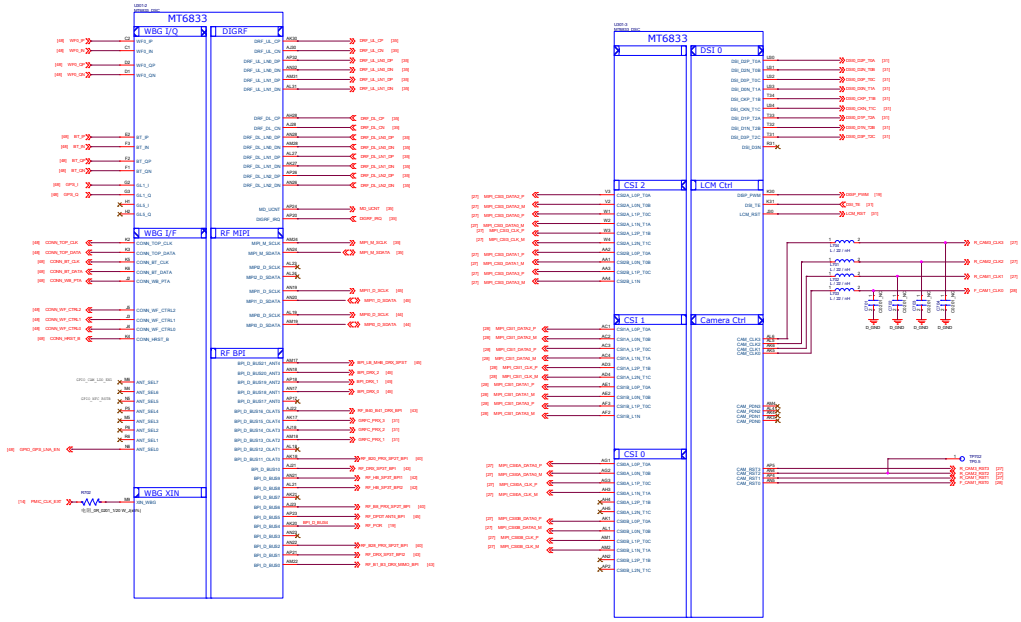

华勤通讯 Huaqin Telecom Technology Com.,Ltd		
Title 07.BB_2		
Size D	Project <Doc>	Rev V1
Date: Monday, October 18, 2021	Sheet 7 of 23	

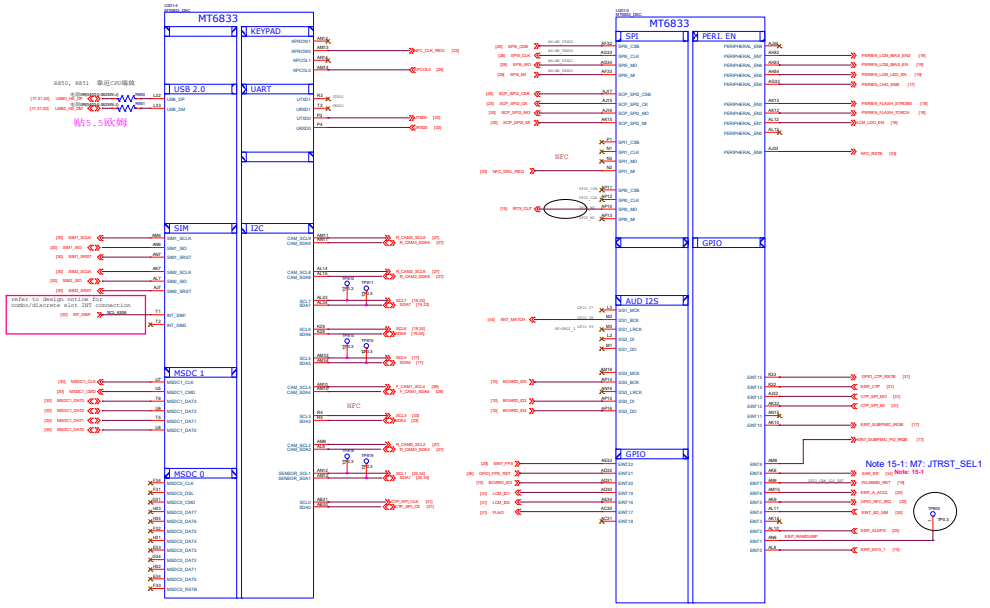

华勤通讯 Huaqin Telecom Technology Com.,Ltd		
Title 08.BB_3		
Size D	Project <Doc>	Rev V1
Date: Monday, October 18, 2021	Sheet 8 of 23	

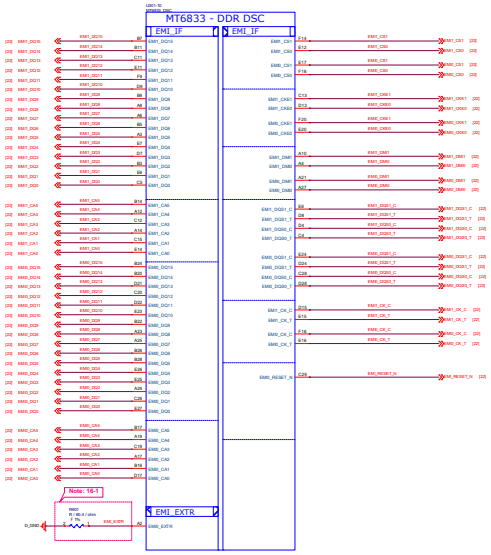

Schematic design notice of "16_BB_4_Interface" page:

Note 16-1: R4001 please select 60.4 ohm (1%) resistor

华勤通讯 Huaqin Telecom Technology Com.,Ltd		
Title 09.BB_4		
Size D	Project <Doc>	Rev V1
Date: Monday, October 18, 2021	Sheet 9 of 23	

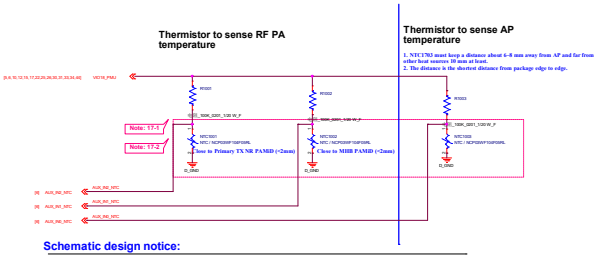

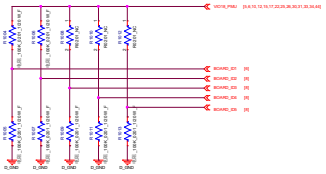

Schematic design notice:

Note 17-1: SW Default Configuration is as followings
AUX_IN0_NTC is for AP Temp.
AUX_IN1_NTC is for MHB PAMiD Temp.
AUX_IN2_NTC is for NR PAMiD Temp.

Note 17-2: If your design or placement is different with SW Default Config.
Please refer to "MTXXXX Thermal User Manuel.docx" and modify SW setting.

华勤通讯 Huaqin Telecom Technology Com.,Ltd		
Title 10.BB_AUXADC_Thermal/BOARD_ID		
Size D	Project <Doc>	Rev V1
Date: Monday, October 18, 2021	Sheet 10 of 23	

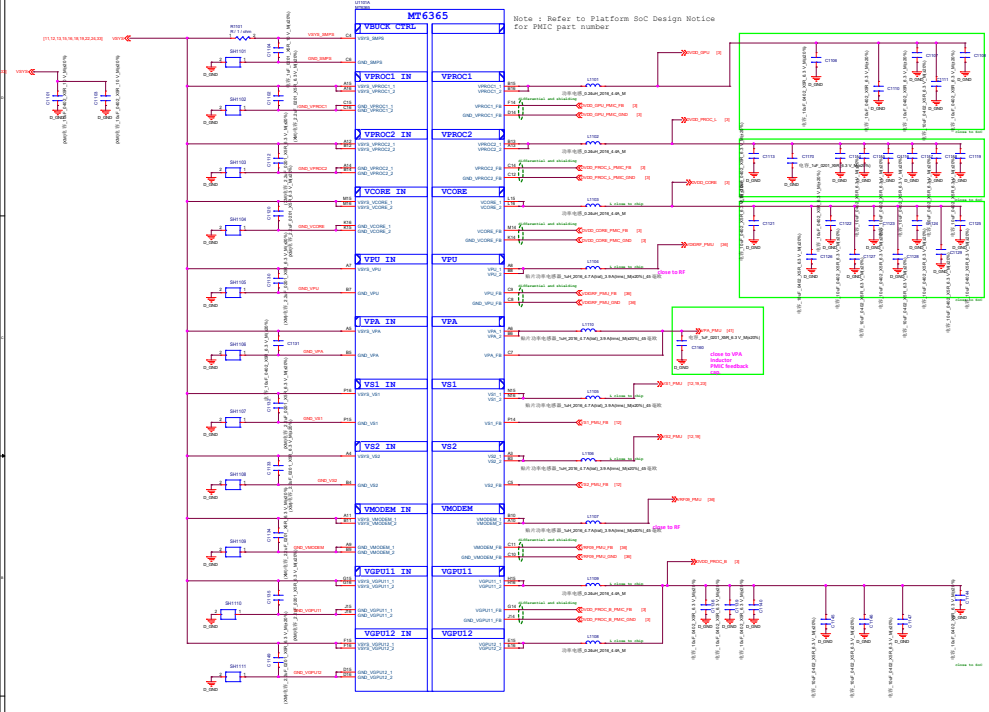

Circuit Type	Buck Name (Application name)	Output Voltage Range (V)	Boot Default (V)	$I_{OUT-MAX}$ (mA)
Buck	VPROC1 (DVDD_GPU)	0.40 ~ 1.19 (6.25mV/step)	ON (0.75)	4800
	VPROC2 (DVDD_PROC_L)	0.40 ~ 1.19 (6.25mV/step)	ON (0.75)	4800
	VGPU11+12 (DVDD_PROC_B)	0.40 ~ 1.19 (6.25mV/step)	ON (0.75)	4800 *2
	VCORE (DVDD_CORE)	0.40 ~ 1.3 (6.25mV/step)	ON (0.75)	4800
	VMODEM (VRF09_PMU)	0.50 ~ 1.10 (6.25mV/step)	OFF	4800
	VPU (VDIGRF_PMU)	0.40 ~ 1.19 (12.5mV/step)	ON (0.7)	2400
	VS1 (VS1_PMU)	1.86 ~ 2.20 (12.5mV/step)	ON (2.0)	2200
	VS2 (VS2_PMU)	1.20 ~ 1.50 (12.5mV/step)	ON (1.35)	2500
	VPA (VPA_PMU)	0.50 ~ 3.40 (50mV/step)	OFF	1000

华勤通讯 Huaqin Telecom Technology Com.,Ltd		
Title	11.POWER_MT6365_Buck	
Size D	Project <Doc>	Rev V1
Date: Monday, October 18, 2021	Sheet 11 of 23	

Note : Refer to Platform SoC Design Notice
for PMIC part number

1. "Typical Cap" defined in design notice is the minimum cap. to LDO Cout.
2. NC cap can move to application, if (PCB L<20nH, PCB R<0.2mohm)
=> value and placement of Cap, please refer design notice

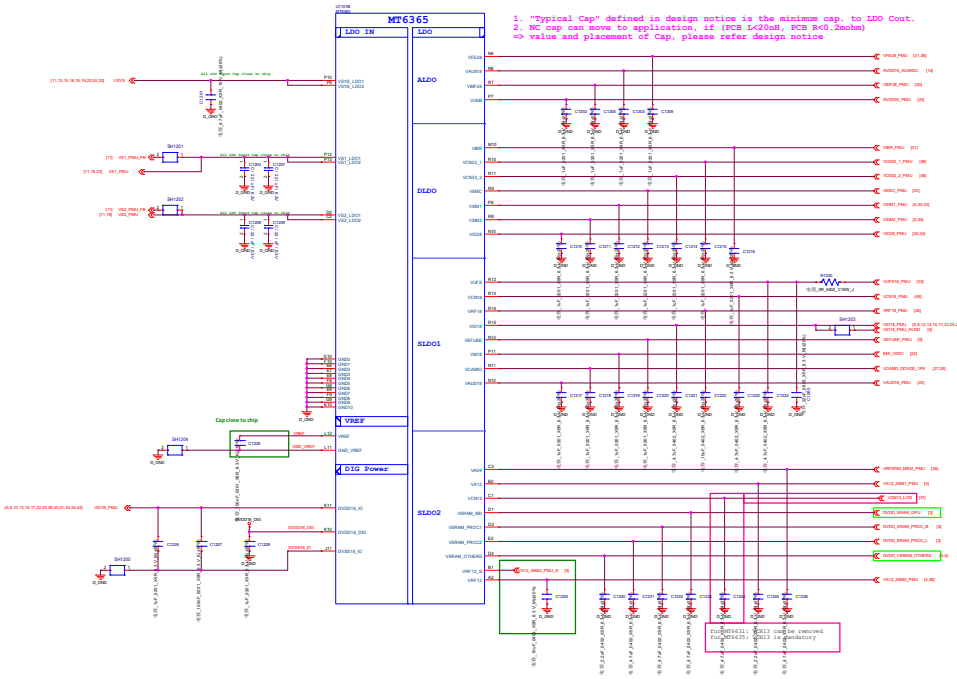

Circuit Type	LDO Name	Output Voltage (V)	Boot Default (V)	$I_{OUT-MAX}$ (mA)	Expected use
ALDO	VFE28	2.80	OFF (2.8)	200	RFFE
	VUSB	3.07	ON (3.07)	200	USB
	VAUX18	1.84	ON (1.84)	50	AUXADC
	VXO22	2.24	ON (2.24)	25	DCXO
	VBIF28	2.80	OFF (2.8)	50	Battery Interface
VRTC	VRTC	2.80	ON (2.8)	2	RTC
VDIG	DVDD18_DIG	1.80	ON (1.8)	10	PMIC Digital

Circuit Type	LDO Name	Output Voltage (V)	Boot Default (V)	$I_{OUT-MAX}$ (mA)	Expected use
DLDO	VSIM1	1.7/1.8/1.90/ 2.78/3.0/3.1	OFF (1.86)	200	SIM
	VSIM2	1.7/1.8/1.90/ 2.76/3.0/3.1	OFF (1.86)	200	SIM
	VCN33_1	3.3/3.4/3.5/3.6	OFF (3.3)	800	Connectivity
	VCN33_2	3.3/3.4/3.5/3.6	OFF (3.3)	800	Connectivity
	VEMC	2.55/2.9/3.0/3.3	ON (3.0)	800	eMMC / UFS
	VIO28	2.8/2.9/3.0/ 3.1/3.2/3.3	OFF (2.8)	200	IO & Sensor
	VIBR	2.7/2.8/3/3.3	OFF (2.8)	200	Vibrator

Circuit Type	LDO Name	Output Voltage (V)	Boot Default (V)	$I_{OUT-MAX}$ (mA)	Expected use
SLDO1	VEFUSE	1.80	OFF (1.8)	300	EFUSE
	VAUD18	1.80	ON (1.8)	300	Audio
	VCAMIO	1.80	OFF (1.8)	300	Camera IO
	VM18	1.80	ON (1.8)	300	DRAM
	VRF18	1.80	OFF (1.8)	450	RF
	VIO18	1.80	ON (1.8)	600	IO & Sensor
	VON18	1.80	OFF (1.8)	1200	Connectivity
	VUFS	1.86	ON (1.86)	1200	eMMC / UFS
DCXO LDO	VRFCK	1.30 @ boot 1.20 @ wake	ON (1.4)	10	DCXO
	VBBCK	1.24	ON (1.24)	10	DCXO

Circuit Type	LDO Name	Output Voltage (V)	Boot Default (V)	$I_{OUT-MAX}$ (mA)	Expected use
SLDO2	VA09	0.85	ON (0.85)	300	DIGRF SRAM (VRFDPBS_MEM_PMU)
	VA12	1.2	ON (1.2)	300	AP Analog Module
	VON13	1.3	OFF (1.3)	350	Connectivity
	VSRAM_PROC1	0.60~1.2 (6.25mV/step)	ON (0.85)	600	CPUB SRAM
	VSRAM_PROC2	0.60~1.2 (6.25mV/step)	ON (0.85)	600	CPUL SRAM
	VSRAM_OTHERS	0.60~1.2 (6.25mV/step)	ON (0.75)	600	OTHERS SRAM
	VSRAM_MD	0.60~1.2 (6.25mV/step)	ON (0.85)	600	GPU SRAM
	VRF12	1.2	ON (1.2)	800	AP Analog Module

华勤通讯 Huaqin Telecom Technology Com.,Ltd		
Title 12.POWER_MT6365_LDO		
Size D	Project <Doc>	Rev V1
Date: Monday, October 18, 2021	Sheet 12 of 23	

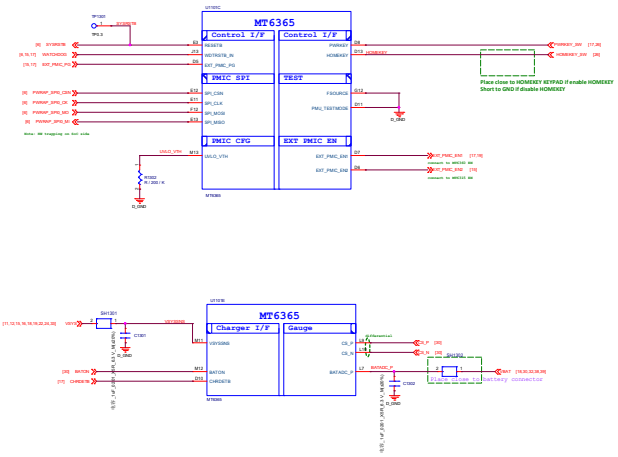

华勤通讯 Huaqin Telecom Technology Com.,Ltd		
Title	13.POWER_MT6365_General	
Size D	Project <Doc>	Rev V1
Date: Thursday, November 11, 2021	Sheet 13 of 23	

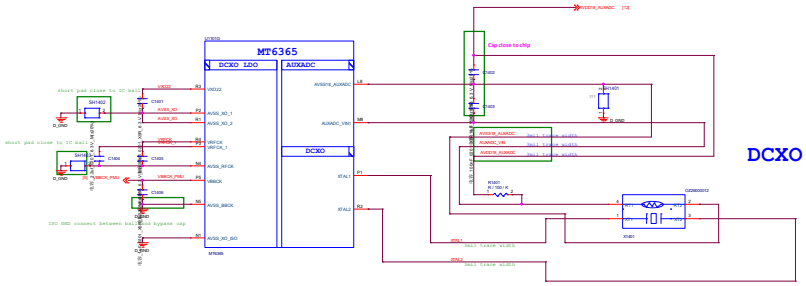

Route XTAL1/ XTAL2/ AVDD18_AUXADC/ AUXADC_VIN/ AVSS18_AUXADC with 3mils width traces and well GND shielding.

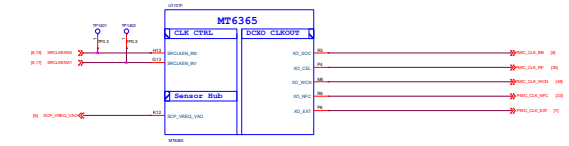

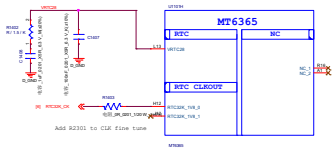

华勤通讯 Huaqin Telecom Technology Com.,Ltd		
Title	14.POWER_MT6365_Clock	
Size D	Project <Doc>	Rev V1
Date: Monday, October 18, 2021	Sheet 14 of 23	

MT6315 4-Phase Buck (MD)

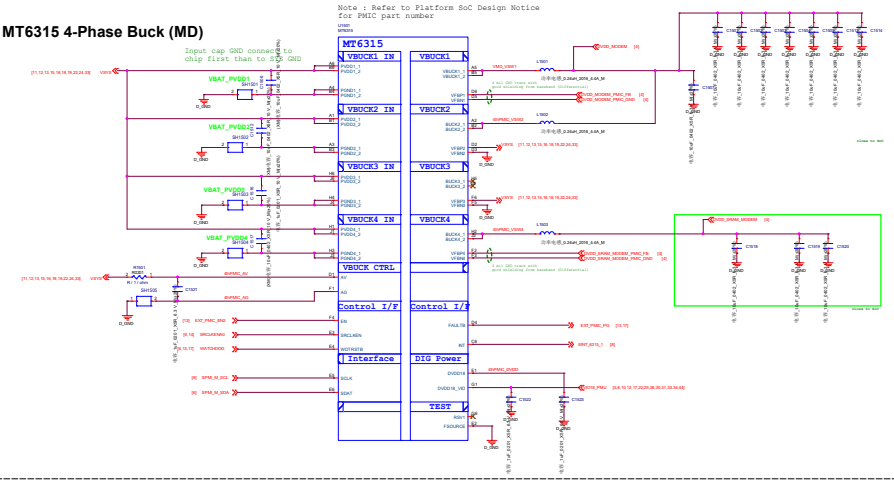

MT6315NP/B	Output Voltage Range (V)	Boot Default (V)	$I_{OUT-MAX}$ (mA)	Expected use
BUCK1+2	0.40 ~ 1.19375 (6.25mV/step)	ON (0.825)	5000*2	DVDD_MODEM
BUCK3	0.40 ~ 1.19375 (6.25mV/step)	ON (0.75)	5000	--
BUCK4	0.40 ~ 1.19375 (6.25mV/step)	ON (0.825)	5000	DVDD_SRAM_MODEM

IR LED

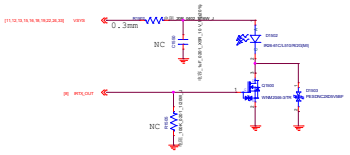

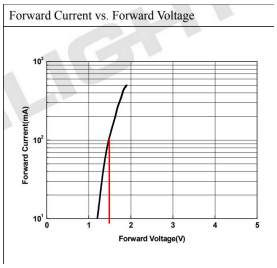

华勤通讯 Huaqin Telecom Technology Com.,Ltd		
Title 15.POWER_MT6315_VMD/IR_LED		
Size D	Project <Doc>	Rev V1
Date: Thursday, November 11, 2021	Sheet 15 of 23	

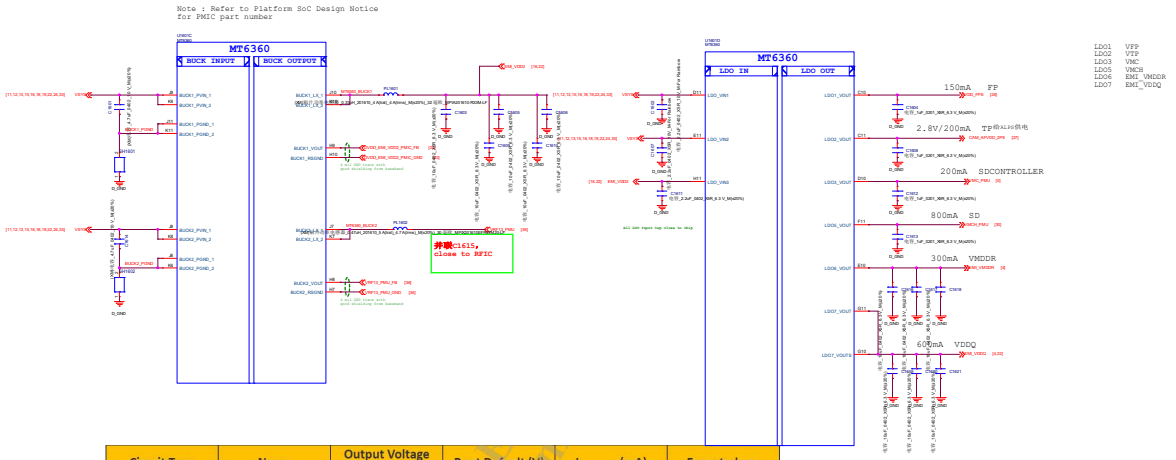

Circuit Type	Name	Output Voltage Range (V)	Boot Default (V)	$I_{OUT-MAX}$ (mA)	Expected use
Buck	BUCK1	0.3 ~ 1.3 (5mV/step)	ON (1.125)	3000	EMI_VDD2
	BUCK2	0.3 ~ 1.3 (5mV/step)	OFF (1.3)	3000	VRF13_PMU

Circuit Type	Name	Output Voltage (V)	Boot Default (V)	$I_{OUT-MAX}$ (mA)	Expected use
LDO	LDO1	1.8/2.0/2.1/2.5/2.7/2.8/2.9/3.0/3.1/3.3	OFF (1.8)	150	Fingerprint
	LDO2	1.8/2.0/2.1/2.5/2.7/2.8/2.9/3.0/3.1/3.3	OFF (1.8)	200	Touch Panel
	LDO3	1.8/2.9/2.8/3.0/3.3	OFF (3.0)	200	SD Card
	LDO5	2.9/3.0/3.3	OFF (3.0)	800	SD Card
	LDO6	0.75	ON (0.75)	300	EMI_VMDDR
	LDO7	0.6	ON (0.6)	600	EMI_VDDQ

华勤通讯 Huaqin Telecom Technology Com.,Ltd		
Title 16.POWER_MT6360_BUCK_LDO*		
Size D	Project <Doc>	Rev V1
Date: Monday, October 18, 2021	Sheet 16 of 23	

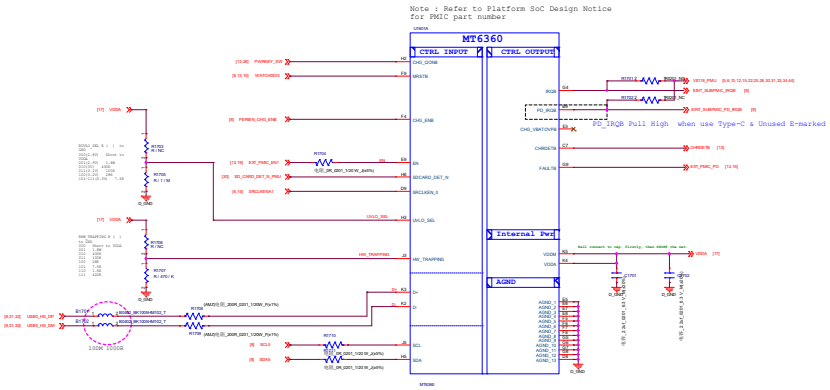

华勤通讯 Huaqin Telecom Technology Com.,Ltd		
Title	17.POWER_MT6360_General	
Size D	Project <Doc>	Rev V1
Date: Monday, October 18, 2021	Sheet 17 of 23	

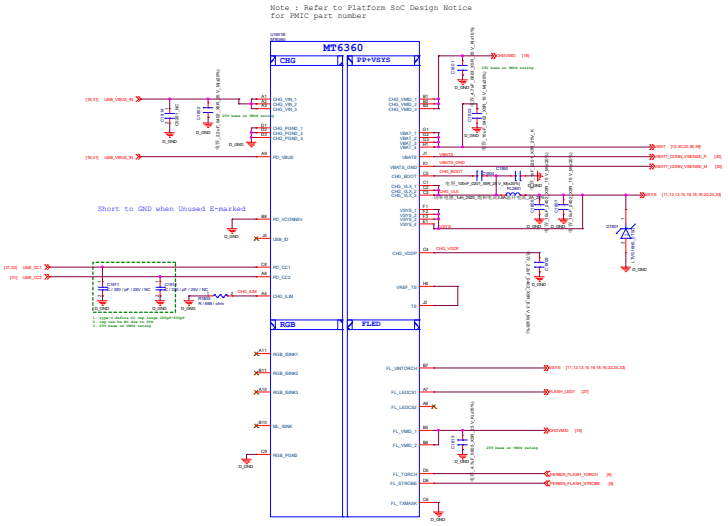

Schematic design notice of "28_POWER_MT6360_Charger" page.

Note 28-1: For better ESD & surge performance we need choose suitable device for system protection. Please refer to the latest version of [Surge device selection guide] provided by MTK.

华勤通讯 Huaqin Telecom Technology Com.,Ltd		
Title 18.POWER_MT6360_Charger		
Size D	Project <Doc>	Rev V1
Date: Friday, December 24, 2021	Sheet 18 of 23	

LCM Backlight LED Driver

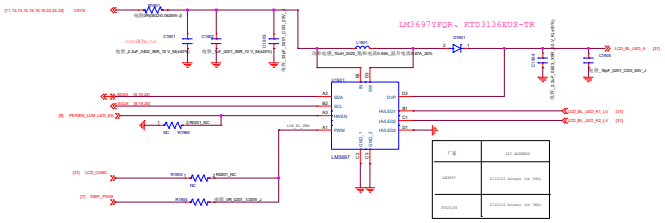

LCM Bias

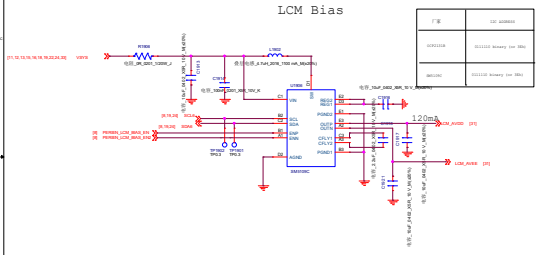

External VIO18_LDO: option for power leakage from UART port on product line

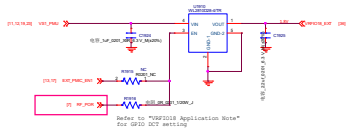

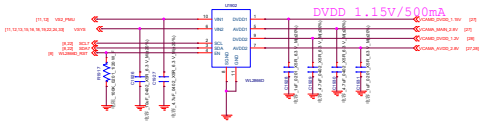

NC

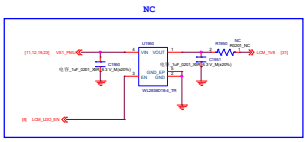

华勤通讯 Huaqin Telecom Technology Com.,Ltd	
Title 19.POWER_EXT	
Size D	Project <Doc>	Rev V1
Date: Thursday, November 11, 2021	Sheet 19 of 23

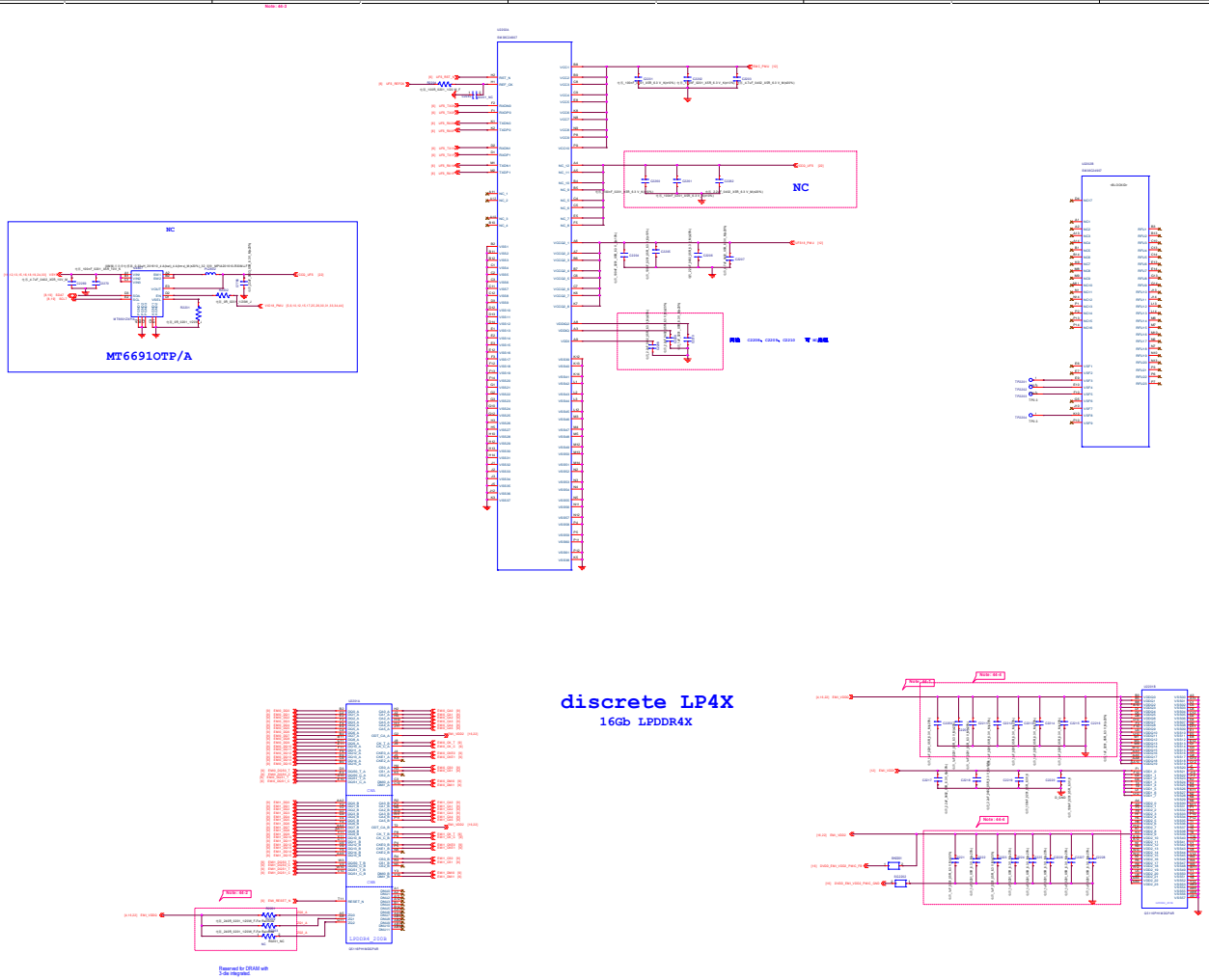

Schematic design notice of "44_Memory_eMMC_LPDDR4X"

Note 44-1:	Please refer to power supply related page select VDRAM 2 / VDRAM1 output voltage properly for LPDDR4X
Note 44-2:	DRAM ZQx resistor = 240ohm (1%) that must be connected to VDDQ.
Note 44-3:	Please refer to eMCP vendor's datasheet or MTK common design notice to get the recommendation bypass cap. value for VCC/VCCQ/VDDI power domains of eMMC.
Note 44-4:	VDD2 VDDQ decoupling cap: closed to DRAM ball. For other cap for PMIC [~10uF: at PMIC page]: please also refer to MMD and layout guide for placement.

华勤通讯 Huaqin Telecom Technology Com.,Ltd		
Title	01_Block_Diagram	
Size E	Project J19_MB_V1	Rev V1
Date: Monday, October 18, 2021	Sheet 22 of 48	

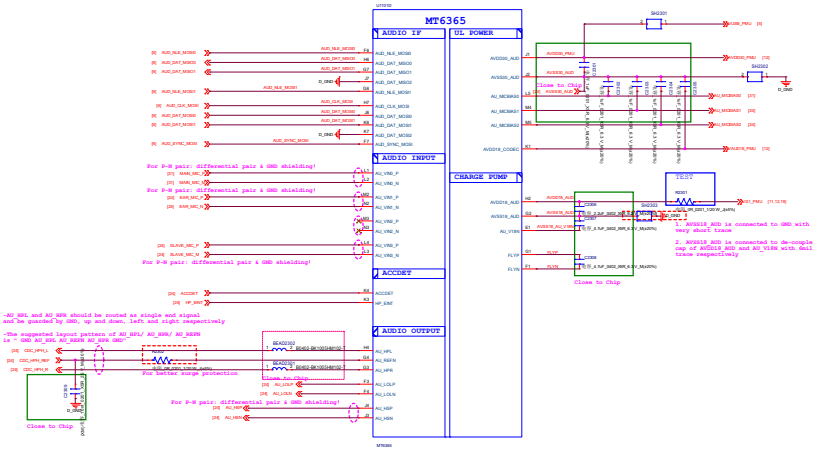

华勤通讯 Huaqin Telecom Technology Com.,Ltd		
Title	23.PERI_AUDIO_PMIC-IF	
Size D	Project <Doc>	Rev V1
Date: Monday, October 18, 2021	Sheet 23 of 23	

Earphone Microphone

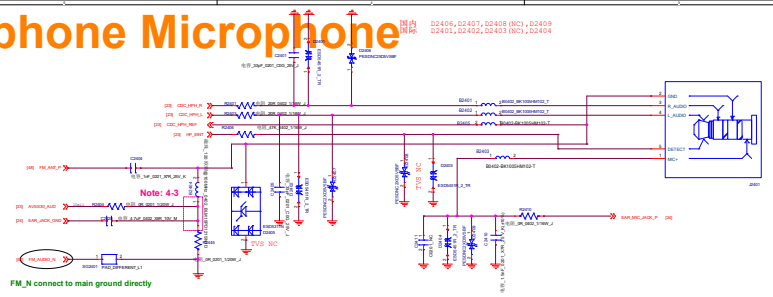

Earphone Microphone

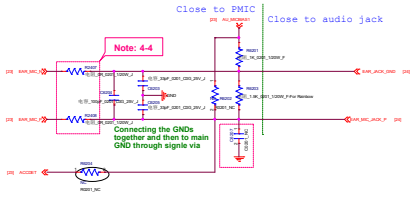

Note 4-3:

	Platform Pin Main board	Platform Pin Sub board
MIC1_P	P MIC	MIC2P

Note 4-4:

1. Need do SW configuration for DCC mode
2. Analog input impedance is as below, please customer check the detail requirement with mic vendor if the mic used has special requirement on the input impedance of analog input

MIC1P/N	MIC MODE	MIC1	MIC2	MIC3
C	DCC	-	-	-

RECIVER

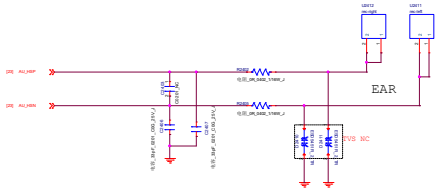

SPEAKER

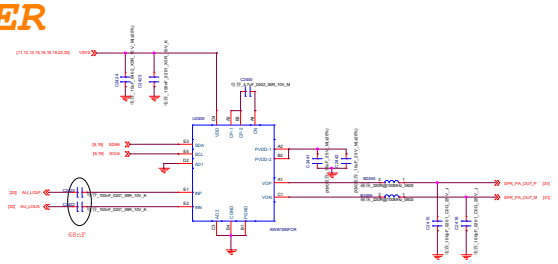

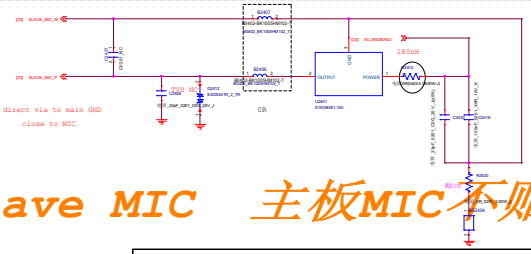

Slave MIC 主板MIC不贴

华勤通讯 Huaqin Telecom Technology Com.,Ltd		
Title	24.MIC/RCV/SPK/Earphone	
Size D	Project <Doc>	Rev V1
Date: Monday, December 06, 2021	Sheet 24 of 50	

eCOMPASS

M-Sensor

厂家	I2C ADDRESS
AKM/MEMSIC	0ch
QMC5883-DS	2ch

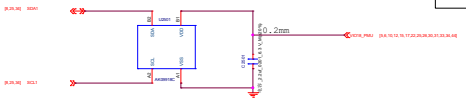

A sensor

default SPI (if sensor hub support)

厂家	I2C ADDRESS	
	SA0=GND	SA0=Vdd(default)
LIS2DH12	0x18--0001100b	0x19--0001101b
BMA420	0x14--0001100b	0x15--0001101b

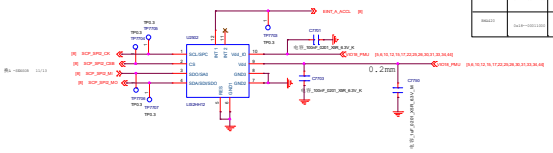

ALS+PS

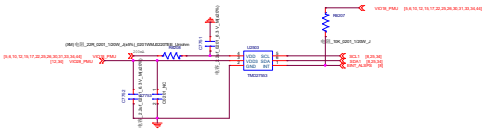

华勤通讯 Huaqin Telecom Technology Com.,Ltd	
Title	25.SENSOR
Size D / Project <Doc>	Rev V1
Date: Monday, October 18, 2021	Sheet 25 of 50

Finger Print

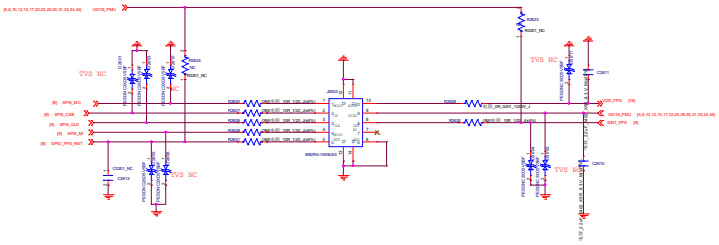

KEY BTB

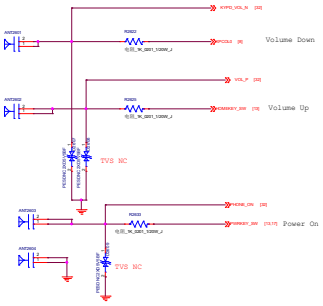

华勤通讯 Huaqin Telecom Technology Com.,Ltd		
Title	26.FP/KEY	
Size D	Project <Doc>	Rev V1
Date: Tuesday, November 02, 202	Sheet 26 of 50	

注意：AGND AFGND都要单独下主地

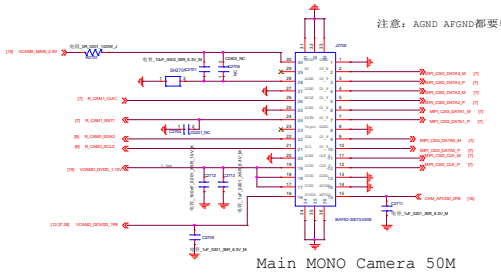

Main MONO Camera 50M

微 距 Camera 2M =Macro

微距不贴

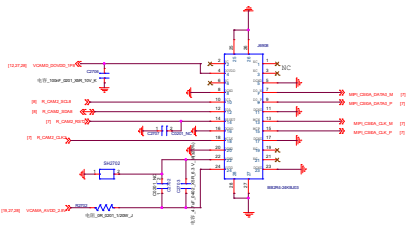

景 深 Camera 2M=Depth

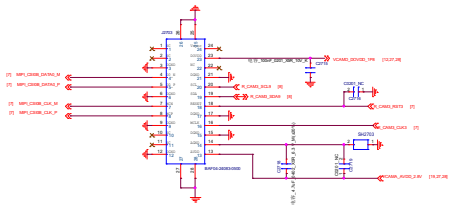

Flash LED 5V Boost

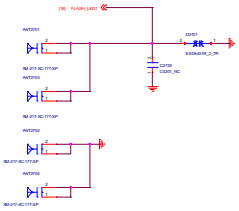

Flash下方地要完整且足够大，散热一定要好

华勤通讯 Huaqin Telecom Technology Com.,Ltd		
Title 27.REAR_CAM		
Size D	Project <Doc>	Rev V1
Date: Monday, October 18, 2021	Sheet 27 of 50	

Front Camera - 8M

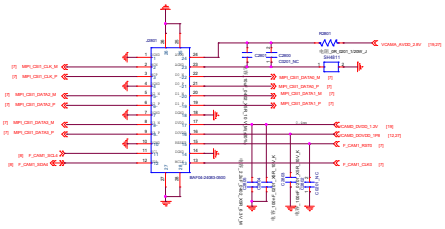

华勤通讯 Huaqin Telecom Technology Com.,Ltd			
Title	28.FRONT_CAM		
Size D	Project <Doc>		Rev V1
Date: Monday, October 18, 2021		Sheet 28 of 50	

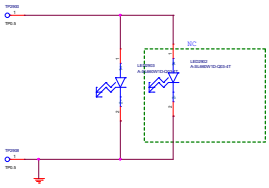

华勤通讯 Huaqin Telecom Technology Com.,Ltd			
Title	Sub_Charger_SMB1396		
Size D	Project <Doc>		Rev V1
Date: Monday, October 18, 2021		Sheet 29 of 50	

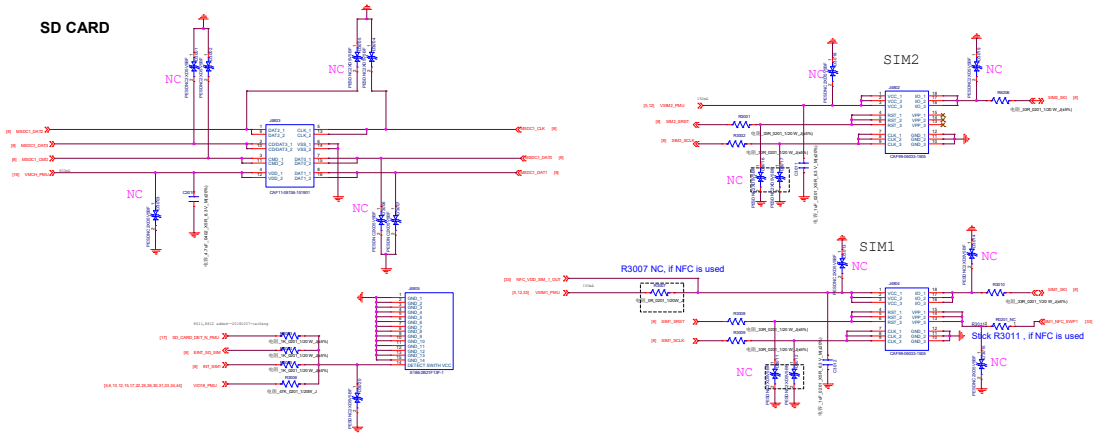

BATT CON

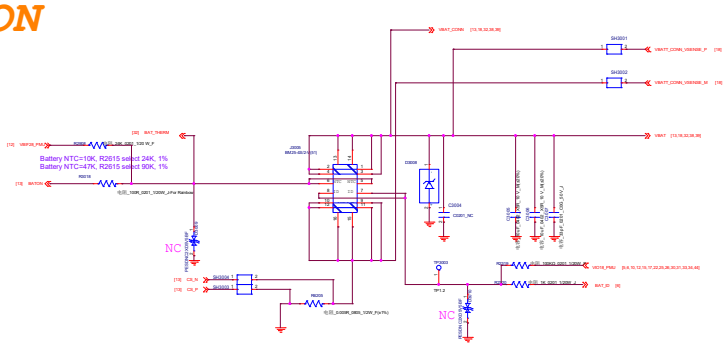

华勤通讯 Huaqin Telecom Technology Com.,Ltd		
Title	30.SIM/BATT	
Size D	Project <Doc>	Rev V1
Date: Wednesday, November 03, 2016	Sheet 30 of 50	

LINK

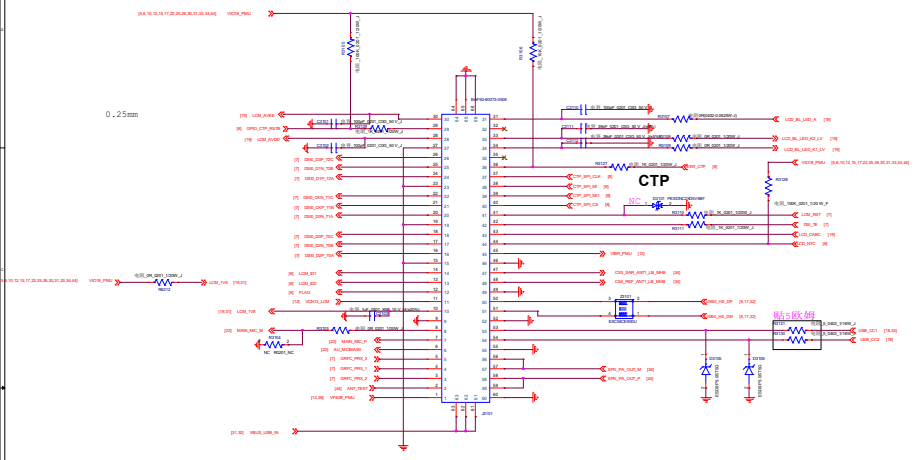

OVP

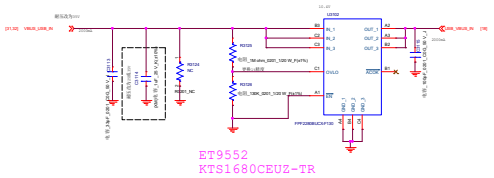

华勤通讯 Huaqin Telecom Technology Com.,Ltd		
Title	31.60PIN_LCD_LINK/OVP	
Size D	Project <Doc>	Rev V1
Date: Friday, December 24, 2021	Sheet 31 of 50	

VBAT TEST POINT

VBAT

KEY BTB

KEYPAD

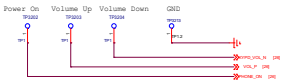

VCHG

UART TP

JTAG

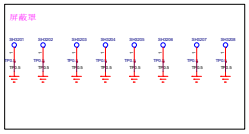

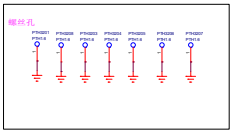

华勤通讯 Huaqin Telecom Technology Com.,Ltd		
Title	32.TEST_POINT/SHIELD	
Size D	Project <Doc>	Rev V1
Date: Monday, October 18, 2021	Sheet 32 of 50	

RF_NFC

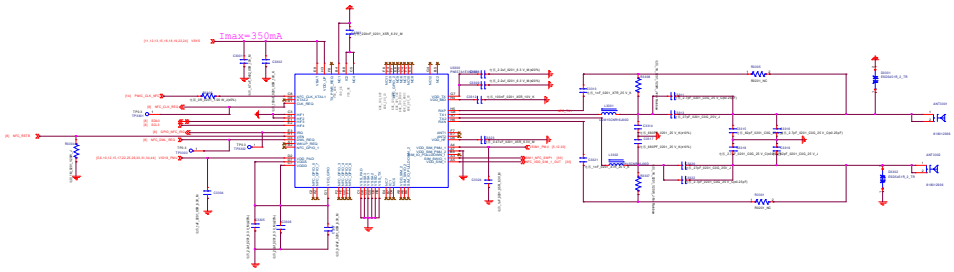

华勤通讯 Huaqin Telecom Technology Com.,Ltd		
Title RF_NFC		
Size E	Project <Doc>	Rev V1
Date: Monday, October 18, 2021	Sheet 33 of 50	

SAR_sensor

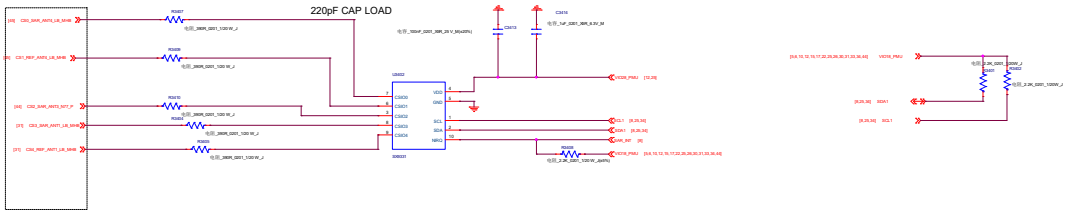

Design notice:
1) CS0_1 nets are differential pairs;
2) The width for each line,should be less than 0.1mm;
3) 0.2mm should be guaranteed between the ground and differential pairs;
4) And also, the distance between the differential line should be more than 0.2mm;
5) All the CSx nets should be protected by surrounding GND;

华勤通讯 Huaqin Telecom Technology Com.,Ltd		
Title SAR_sensor		
Size D	Project <Doc>	Rev V1
Date: Friday, November 12, 2021	Sheet 34 of 50	

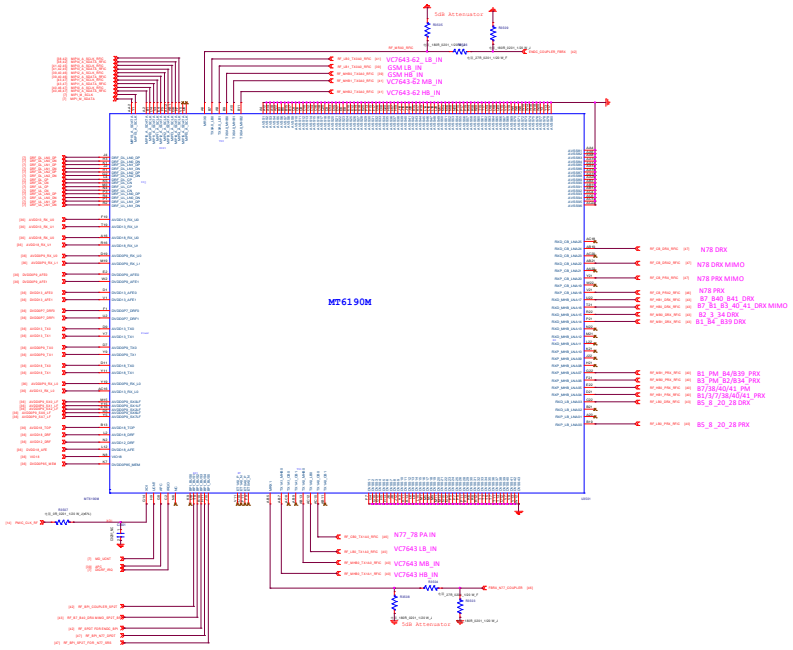

华勤通讯 Huaqin Telecom Technology Com.,Ltd		
Title	MT6190M_Port	
Size E	Project <Doc>	Rev V1
Date: Monday, October 18, 2021	Sheet 35 of 50	

MT6190M_PWR

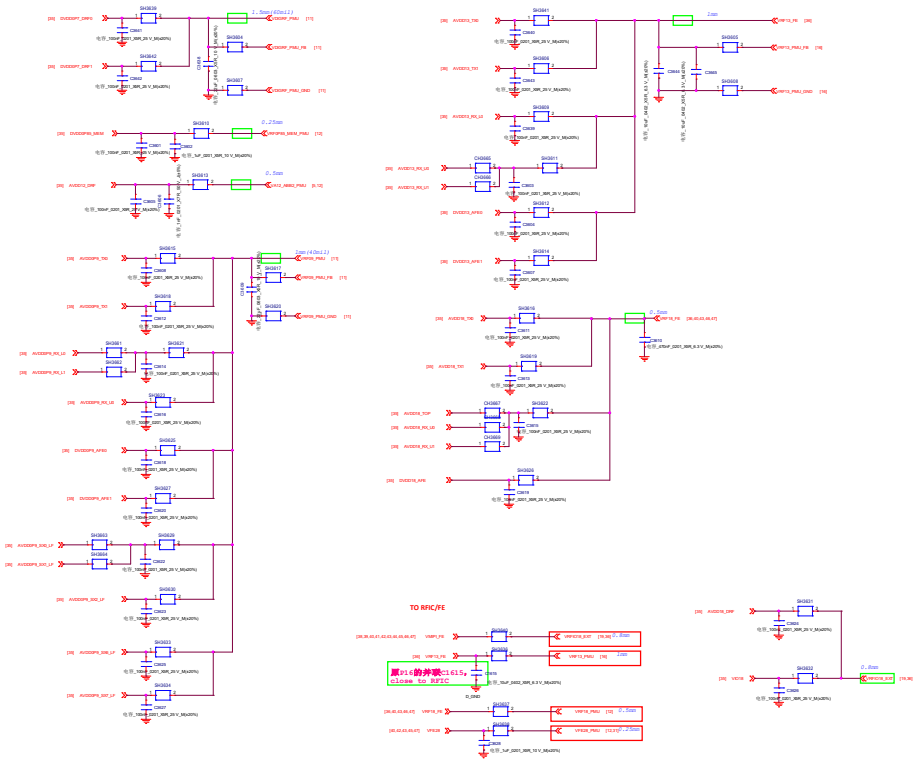

华勤通讯 Huaqin Telecom Technology Com.,Ltd		
Title MT6190M_PWR		
Size D	Project <Doc>	Rev V1
Date: Monday, October 18, 2021	Sheet 36 of 50	

MAIN_ANT

TXM_GSM

LB

MHB

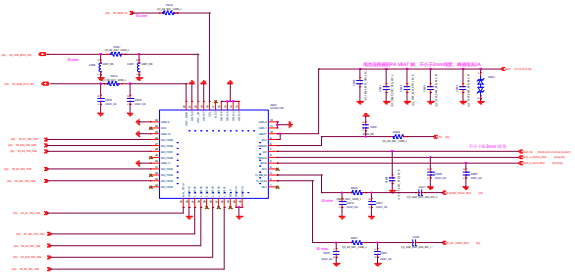

TRX_LB

B5 TX

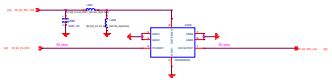

B8 TX

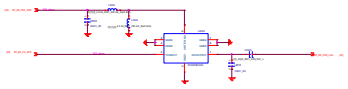

B20 TX

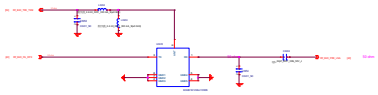

B28 TX

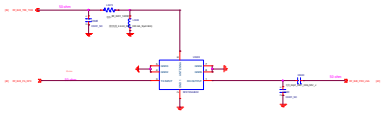

TRX_MHB

B2 TX

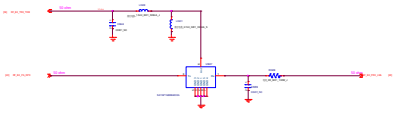

B1 TX

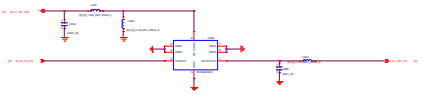

B3 TX

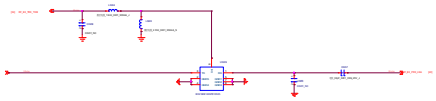

B7 TX

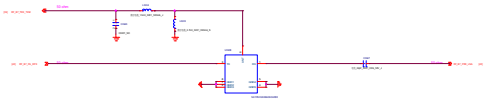

B34 /B39 PRX

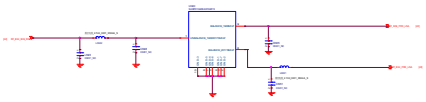

华勤通讯 Huaqin Telecom Technology Com.,Ltd			
Title	TX_Module		
Size Custom	Project <Doc>		Rev V1
Date: Friday, November 12, 2021		Sheet 39 of 50	

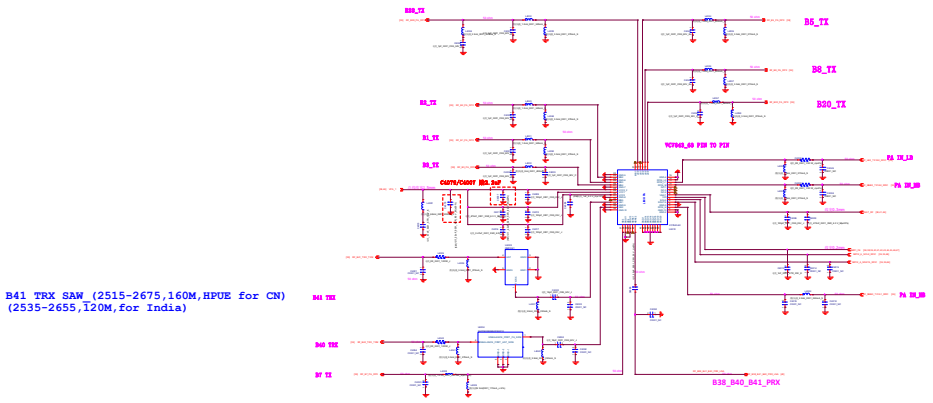

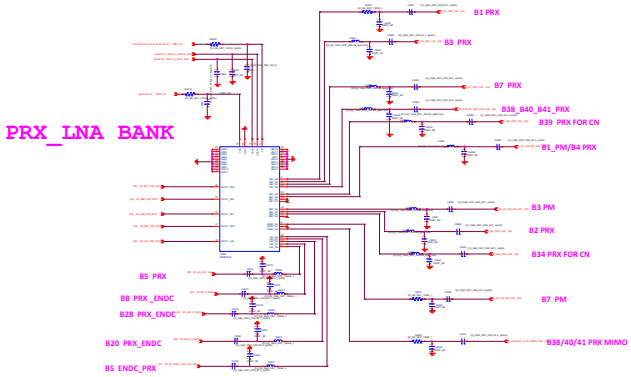

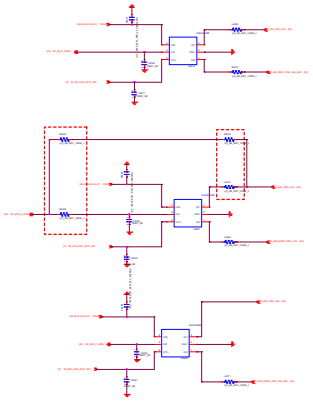

华勤通讯 Huaqin Telecom Technology Com.,Ltd		
Title	4/5G_MHB_PA_Phase5N	
Size Custom	Project <Doc>	Rev v1
Date: Monday, October 18, 2021	Sheet 40 of 50	

MMMB PA_MB ENDC

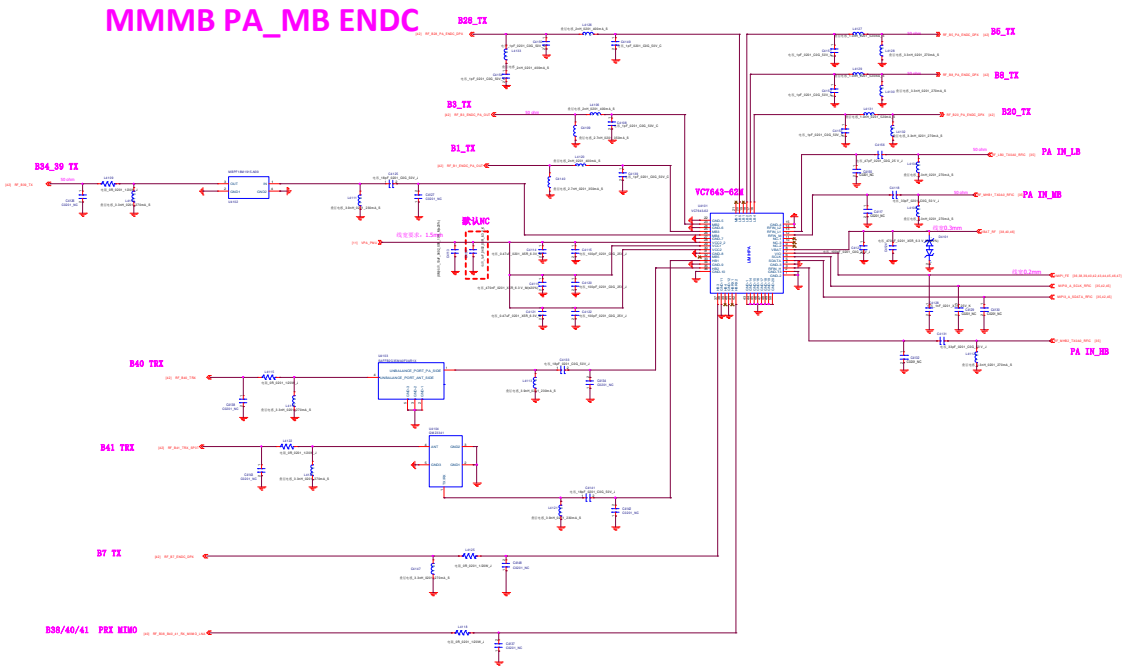

华勤通讯 Huaqin Telecom Technology Com.,Ltd		
Title MMMB PA_MB ENDC		
Size E	Project <Doc>	Rev V1
Date: Friday, November 12, 2021	Sheet 41 of 50	

MMMB PA_VC7643_ENDC_MHB_TRX

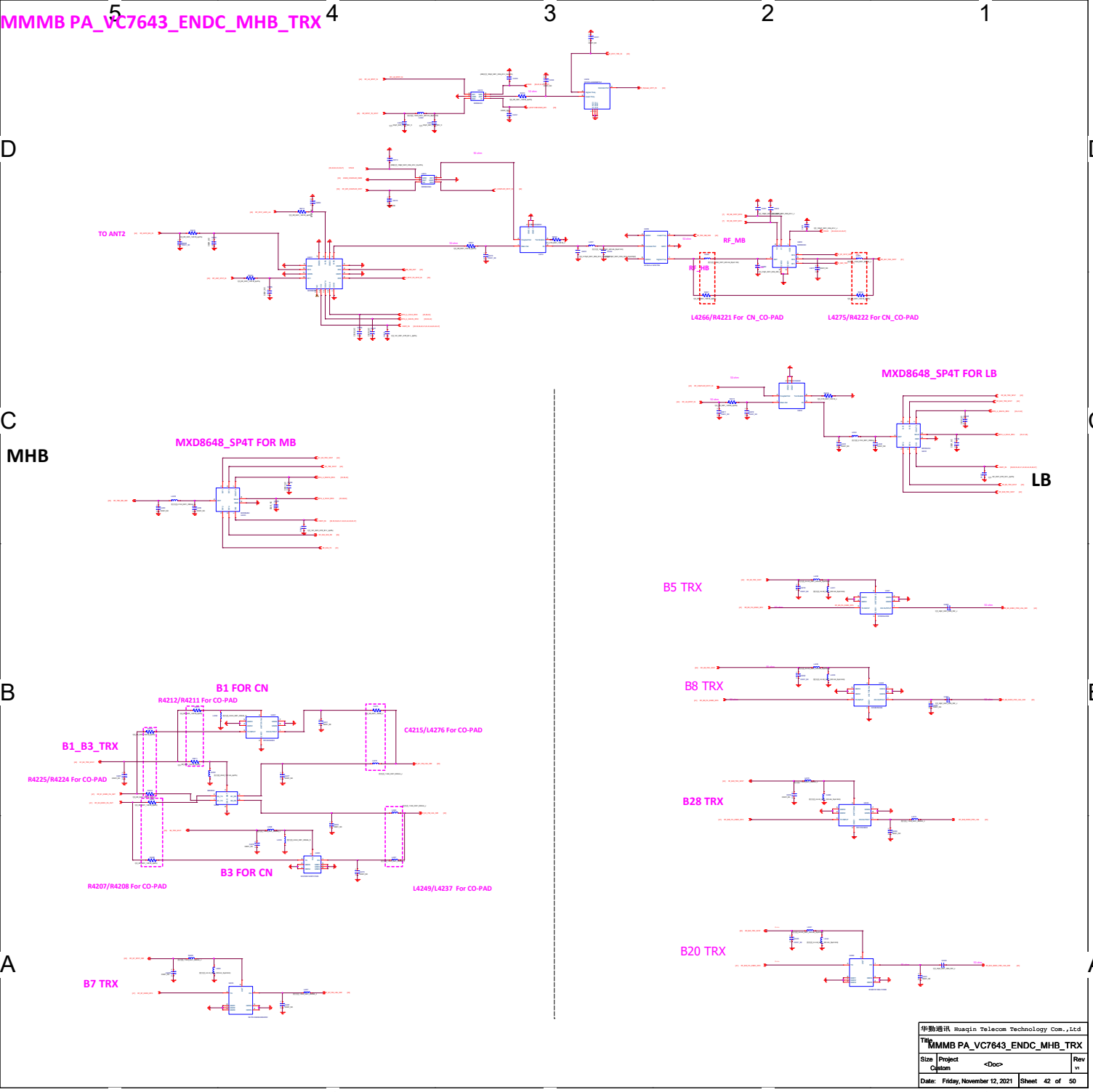

华勤通讯 Huaqin Telecom Technology Com.,Ltd			
Title	MMMB PA_VC7643_ENDC_MHB_TRX		
Size	Project		Rev
Custom	<Doc>		v1
Date: Friday, November 12, 2021	Sheet 42 of 50		

DRX_MXD98E2DA+VC3725

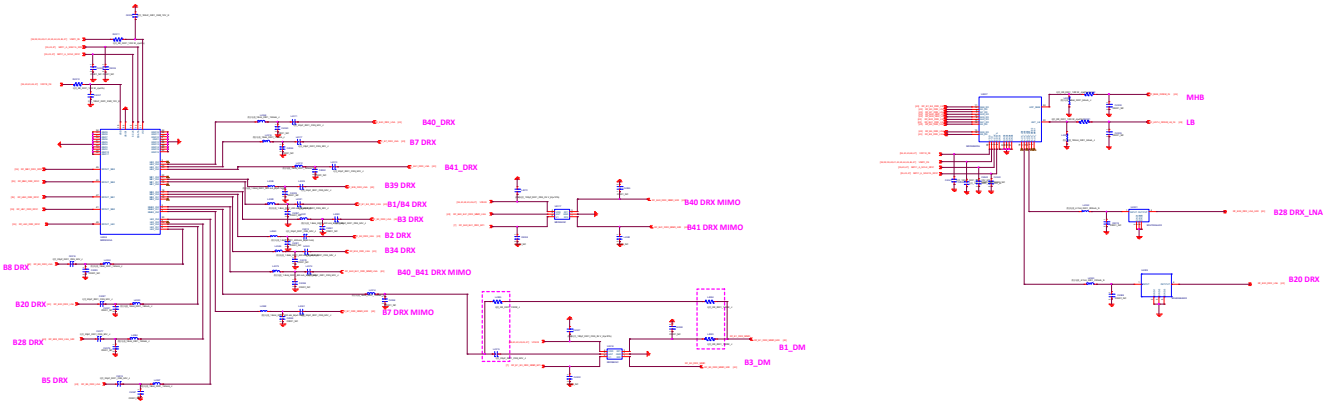

DRX_MIMO

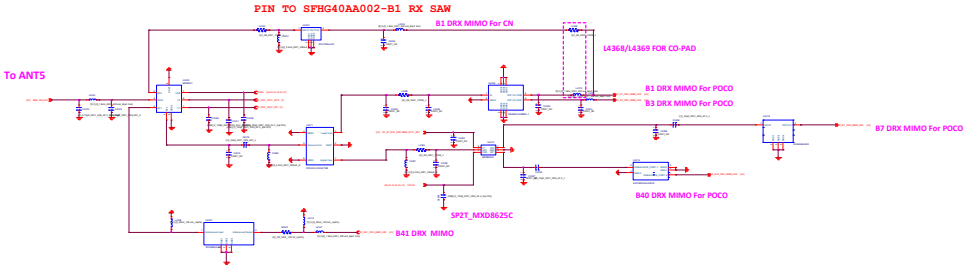

华勤通讯 Huaqin Telecom Technology Com.,Ltd			
Title	MXD98E2DA_VC3725		
Size Custom	Project <Doc>		Rev v1
Date: Friday, October 22, 2021		Sheet 43 of 50	

ANT1（LB_MHB_P）to 小板

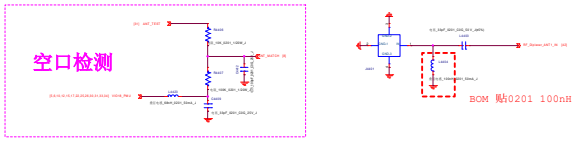

ANT2（MHB_PM/N77_PRX_MIMO）

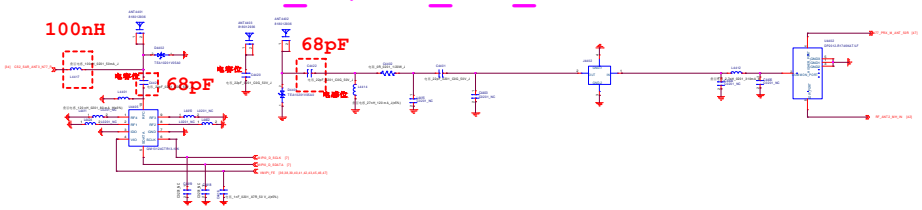

ANT3（N77_PRX）

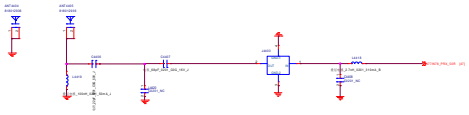

华勤通讯 Huaqin Telecom Technology Com.,Ltd		
Title ANT_P_PM		
Size E	Project <Doc>	Rev V1
Date: Monday, October 18, 2021	Sheet 44 of 50	

ANT4（LB_MHB_D）

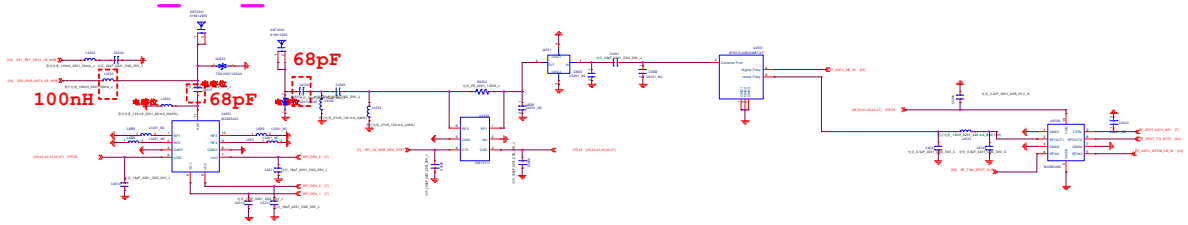

ANT5（MHB_DM/N77_D）

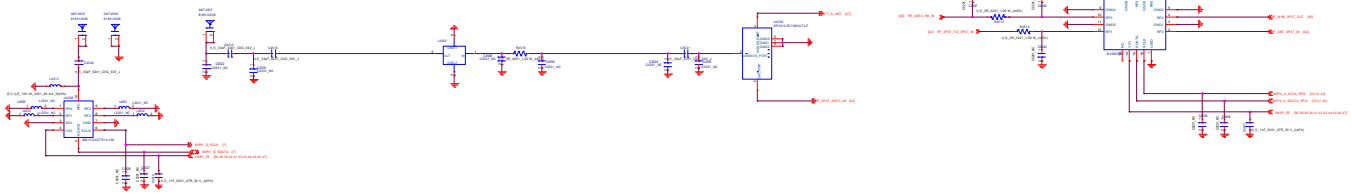

AsDIV_3P3T

接地弹片

ANT6（N77_DM_HB_DRX）to 小板

华勤通讯 Huaqin Telecom Technology Com.,Ltd		
Title	ANT_D_DM	
Size E	Project <Doc>	Rev V1
Date: Friday, October 22, 2021	Sheet 45 of 50	

N77/78_TRX0_VC7530M

NTC温度检测
见P10的R1002 and NTC1002

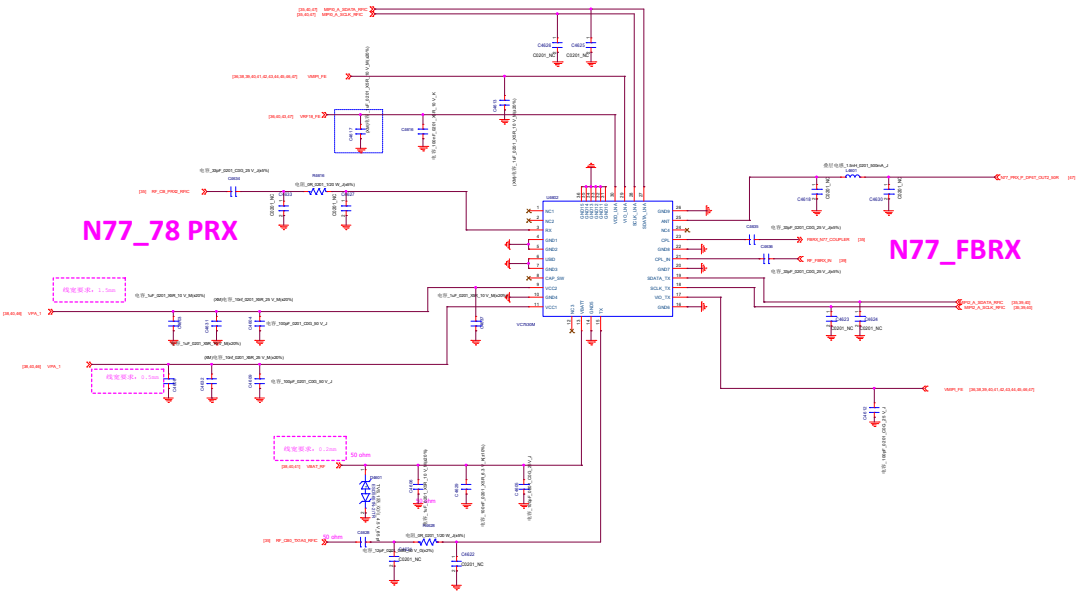

华勤通讯 Huaqin Telecom Technology Com.,Ltd		
Title	N77/78_TRX0_VC7530M	
Size D	Project <Doc>	Rev V1
Date: Monday, October 18, 2021	Sheet 46 of 50	

VC3726

N77/78 DRX

N77/78 DRX MIMO

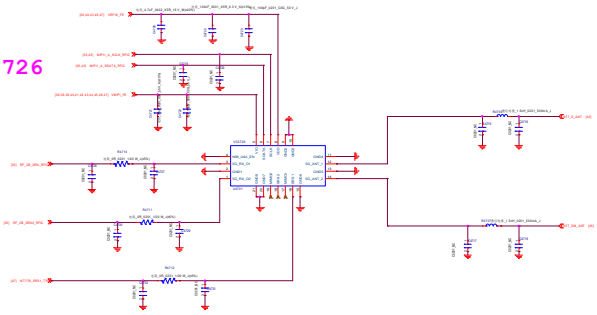

DPDT+SP2T FOR N77/78 SRS

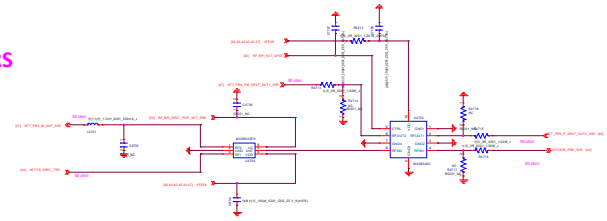

VC3727-11M_N77/78 PRX MIMO

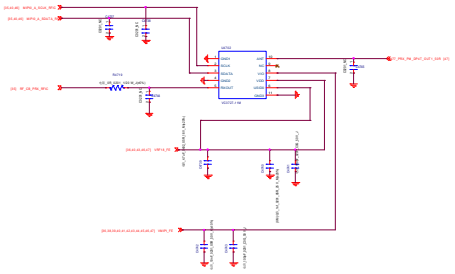

华勤通讯 Huaqin Telecom Technology Com.,Ltd		
Title	VC3726	
Size E	Project <Doc>	Rev V1
Date: Saturday, November 13, 2025	Sheet 47 of 50	

ANT7
WiFi 2.4G & 5G_GPS

MT6631

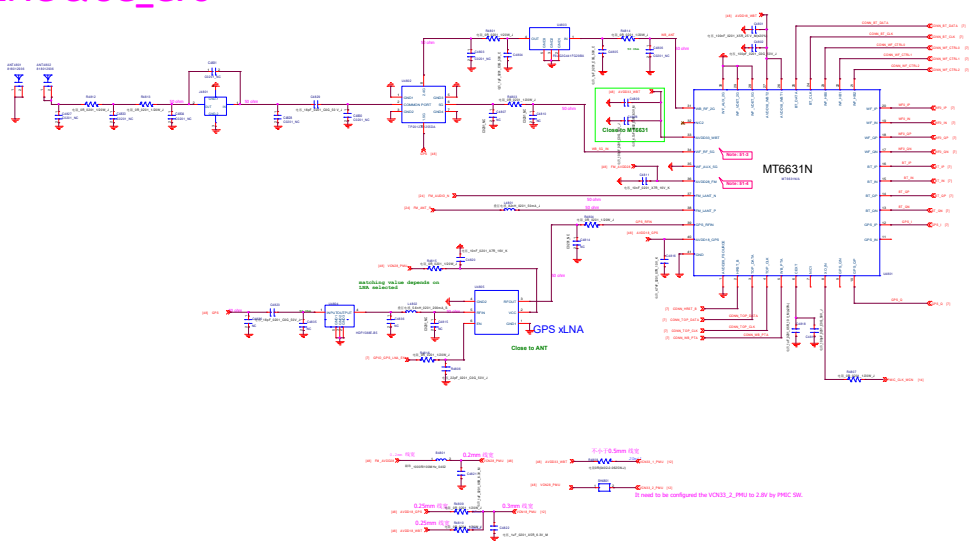

Schematic design notice of "51_CONNECTIVITY_CONSYS_MT6631"

Note 51-1:	For R5015 size, please select 0402 size or larger one
Note 51-2:	Please refer to MT6765 Baseband design notice for VCN33 LDO selection guide
Note 51-3:	If WiFi 5G not support, connect pin 34(WF_RF_5G) to GND
Note 51-4:	Pin 36 (AVDD28_FM) must be connected to VCN28 even if FM not support

华勤通讯 Huaqin Telecom Technology Com.,Ltd		
Title: MT6631		
Size: E	Project: <Doc>	Rev: V1
Date: Monday, October 18, 2021	Sheet 48 of 50	

RF_APT

MT6308 FOR Phase 5N PA_N77_PA

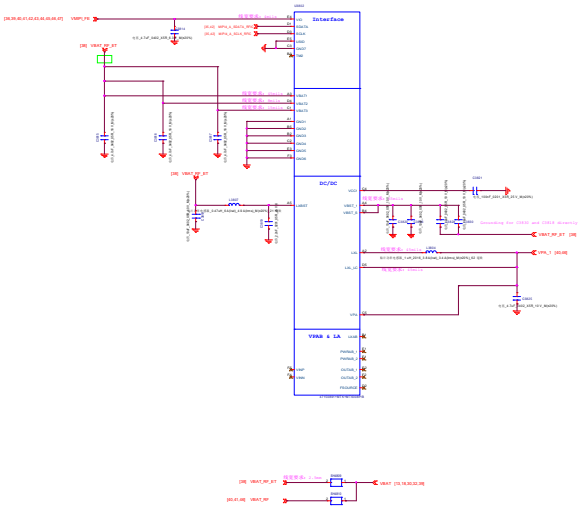

华勤通讯 Huaqin Telecom Technology Com.,Ltd		
Title	RF_APT_MT6308M	
Size E	Project <Doc>	Rev V1
Date: Monday, October 18, 2021	Sheet 50 of 50	